ITEM NO.	PART NUMBER	DESCRIPTION	QTY.
1	17135000	5,000L SLIMLINE TANK	1
2	135344	455mm TANK LID & RIM - NON-VENTED - INTERNAL RIM 385mm	1

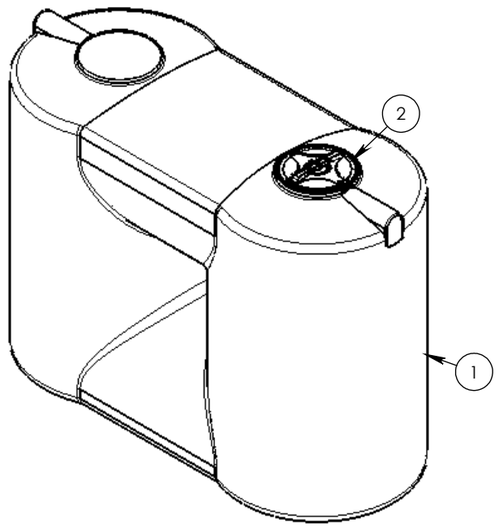

3D ISO VIEW

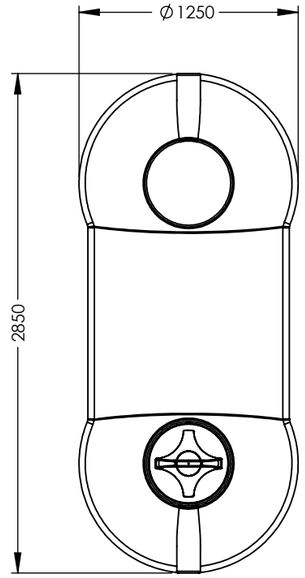

PLAN VIEW

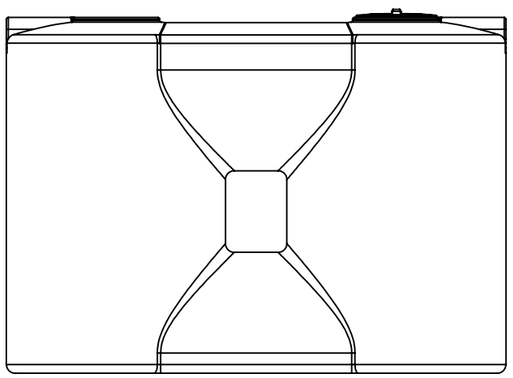

SIDE VIEW

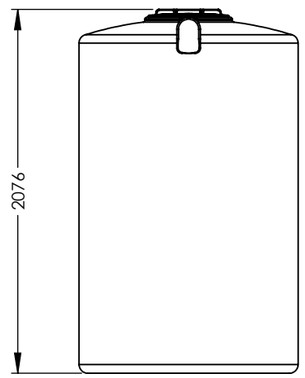

FRONT VIEW

DESIGN DATA

DESIGN PRESSURE: ATMOSPHERIC	MAXIMUM CAPACITY (LTRS): 5440
DESIGN TEMPERATURE: 40°C	WORKING CAPACITY (LTRS): -
WORKING PRESSURE: ATMOSPHERIC	APPROX. WEIGHT FULL (KGS): 5630
WORKING TEMPERATURE: 40°C	APPROX. WEIGHT EMPTY (KGS): 190
MOULDED LIFTING LUGS: 4 - 0°, 90°, 180° & 270°	
METHOD OF SUPPORT: FIRM, FLAT, FULLY SUPPORTING BASE OF CONCRETE OR OTHER SUITABLE MATERIAL	

MATERIAL DATA

MATERIALS OF CONSTRUCTION:

MATRIX REVOLVE N-307. REVOLVE IS A HIGH DENSITY (0.939 g/cm3), LOW MELT (3.5 g/ 10 min) HEXENE POLYETHYLENE GRADE FOR ROTOMOULDING. THE GRADE IS FULLY PROTECTED AGAINST THERMAL AND LIGHT DEGRADATION: N-307 IS UV10 STABILISED.

INSPECTION AND TESTING

WORKS TEST: ALL TANKS ARE THICKNESS TESTED BY ULTRASOUND AFTER DEMOULD. IN ADDITION, AIR SUPPORTED LEAK TEST ARE CARRIED OUT ON FLANGE LINES.

NOTE SECTION

	NAME	SIGNATURE	DATE
DRAWN	LC	L.Crane	24/07/2026
CHECKED			

UNLESS OTHERWISE SPECIFIED:
DIMENSIONS ARE IN MILLIMETERS
SURFACE FINISH: MDPE
TOLERANCES: ±3%

3RD ANGLE PROJECTION

DO NOT SCALE DRAWING

REVISION: -

ENDURAMAXX®
FLUID MANAGEMENT INNOVATION

DWG TITLE:

5,000L SLIMLINE TANK - POTABLE

DWG NO: 17135000-5000L-SLIMLINE

A3

SCALE:1:35

SHEET 1 OF 2