| ITEM NO. | PART NUMBER | DESCRIPTION | QTY. |
|---|---|---|---|
| 1 | 17132000 | 2,000L SLIMLINE TANK | 1 |
| 2 | 135342 | 455mm TANK LID & RIM - VENTED - INTERNAL RIM 385mm | 1 |

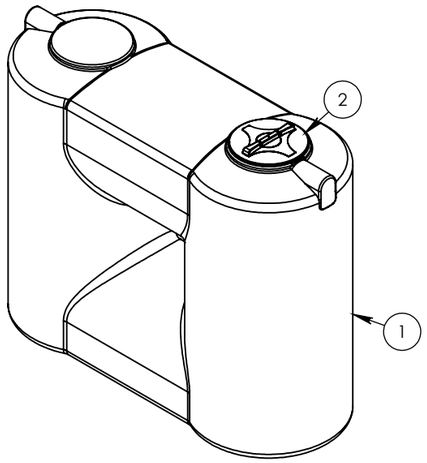


3D ISO VIEW
SCALE 1 : 35

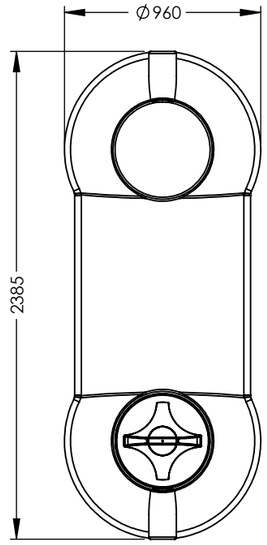


PLAN VIEW

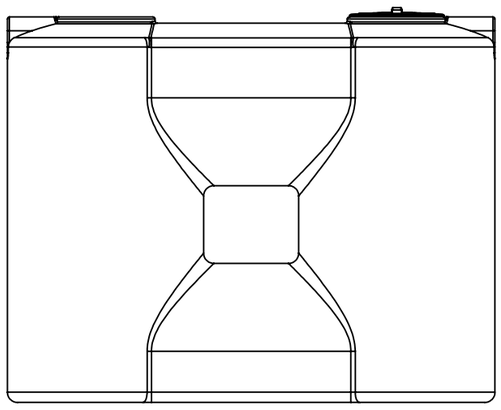

SIDE VIEW

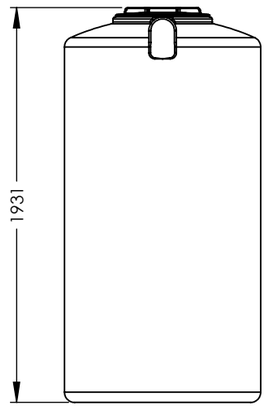


FRONT VIEW

## DESIGN DATA

| | |
|---|---|
| DESIGN PRESSURE: ATMOSPHERIC | MAXIMUM CAPACITY (LTRS): 3180 |
| DESIGN TEMPERATURE: 40°C | WORKING CAPACITY (LTRS): - |
| WORKING PRESSURE: ATMOSPHERIC | APPROX. WEIGHT FULL (KGS): 3340 |
| WORKING TEMPERATURE: 40°C | APPROX. WEIGHT EMPTY (KGS): 160 |
| MOULDED LIFTING LUGS: 4 - 0°, 90°, 180° & 270° | |
| METHOD OF SUPPORT: FIRM, FLAT, FULLY SUPPORTING BASE OF CONCRETE OR OTHER SUITABLE MATERIAL | |

## MATERIAL DATA

MATERIALS OF CONSTRUCTION:

MATRIX REVOLVE N-307. REVOLVE IS A HIGH DENSITY (0.939 g/cm3), LOW MELT (3.5 g/ 10 min) HEXENE POLYETHYLENE GRADE FOR ROTOMOULDING. THE GRADE IS FULLY PROTECTED AGAINST THERMAL AND LIGHT DEGRADATION: N-307 IS UV10 STABILISED.

## INSPECTION AND TESTING

WORKS TEST: ALL TANKS ARE THICKNESS TESTED BY ULTRASOUND AFTER DEMOULD. IN ADDITION, AIR SUPPORTED LEAK TEST ARE CARRIED OUT ON FLANGE LINES.

## NOTE SECTION

| | NAME | SIGNATURE | DATE |
|---|---|---|---|
| DRAWN | LC | L.Crane | 24/07/2026 |
| CHECKED | | | |

UNLESS OTHERWISE SPECIFIED:
DIMENSIONS ARE IN MILLIMETERS
SURFACE FINISH: MDPE
TOLERANCES: ±3%

3RD ANGLE PROJECTION

DO NOT SCALE DRAWING

REVISION: -

ENDURAMAXX®
FLUID MANAGEMENT INNOVATION

DWG TITLE:

3,000L SLIMLINE TANK - NON-POTABLE

DWG NO: 17133000-3000L-SLIMLINE

A3

SCALE:1:30

SHEET 2 OF 2