ITEM NO.	PART NUMBER	DESCRIPTION	QTY.
1	172223	10000L VERTICAL TANK	1
2	135362	∅620 SCREW LID & RIM	1

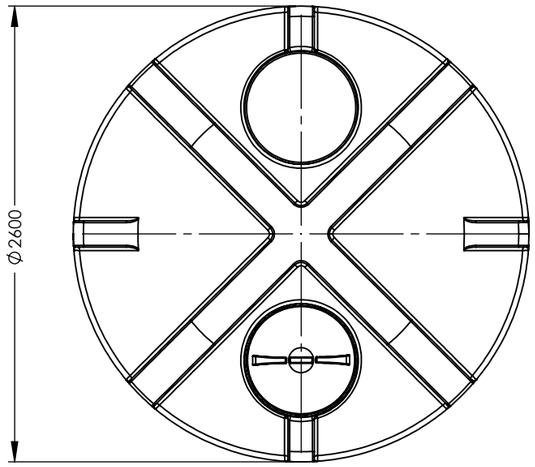

PLAN VIEW

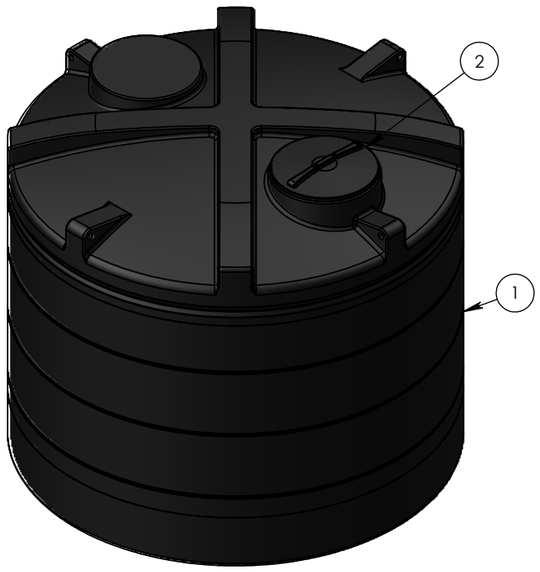

LEFT ISO VIEW

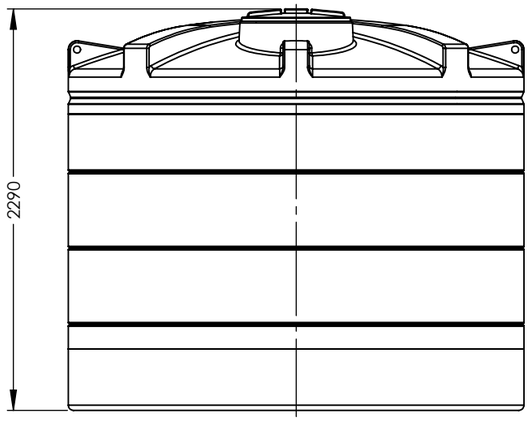

FRONT VIEW

DESIGN DATA

DESIGN PRESSURE: ATMOSPHERIC	MAXIMUM CAPACITY (LTRS): 10850
DESIGN TEMPERATURE: 40°C	WORKING CAPACITY (LTRS): -
WORKING PRESSURE: ATMOSPHERIC	APPROX. WEIGHT FULL (KGS): 11130
WORKING TEMPERATURE: 40°C	APPROX. WEIGHT EMPTY (KGS): 280

MOULDED LIFTING LUGS: 4 - 0°, 90°, 180° & 270°

METHOD OF SUPPORT: FIRM, FLAT, FULLY SUPPORTING BASE OF CONCRETE OR OTHER SUITABLE MATEREAL

MATERIAL DATA

MATERIALS OF CONSTRUCTION:

MATRIX REVOLVE N-307. REVOLVE IS A HIGH DENSITY (0.939 g/cm3), LOW MELT (3.5 g/ 10 min) HEXENE POLYETHYLENE GRADE FOR ROTOMOULDING. THE GRADE IS FULLY PROTECTED AGAINST THERMAL AND LIGHT DEGRADATION: N-307 IS UV10 STABILISED.

INSPECTION AND TESTING

WORKS TEST: ALL TANKS ARE THICKNESS TESTED BY ULTRASOUND AFTER DEMOULD IN ADDITION AIR SUPPORTED LEAK TEST ARE CARRIED OUT ON FLANGE LINES.

NOTE SECTION

	NAME	SIGNATURE	DATE
DRAWN	LC	L.Crane	01/07/2021
CHECKED			

UNLESS OTHERWISE SPECIFIED:
DIMENSIONS ARE IN MILLIMETERS
SURFACE FINISH: MDPE
TOLERANCES: ±3%

3RD ANGLE PROJECTION

DO NOT SCALE DRAWING

REVISION: -

ENDURAMAXX®
FLUID MANAGEMENT INNOVATION

DWG TITLE:

DWG NO: 172223-10000L-VERTICAL

A3

SCALE:1:35

SHEET 1 OF 1