ITEM NO.	PART NUMBER	DESCRIPTION	QTY.
1	171040	6000L HORIZONTAL TRANSPORT TANK	1
2	135341	Ø455 SS HINGED LID & RIM	1

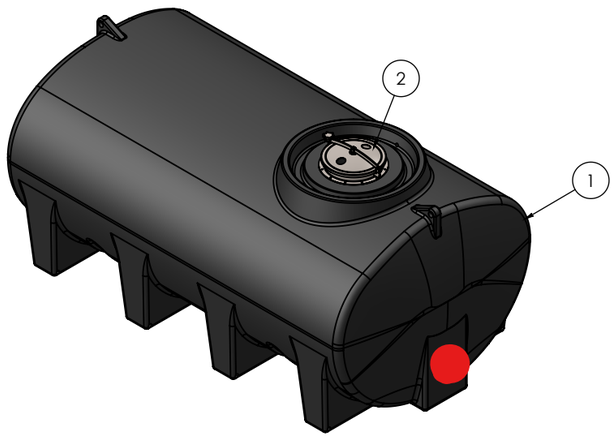

LEFT ISO VIEW

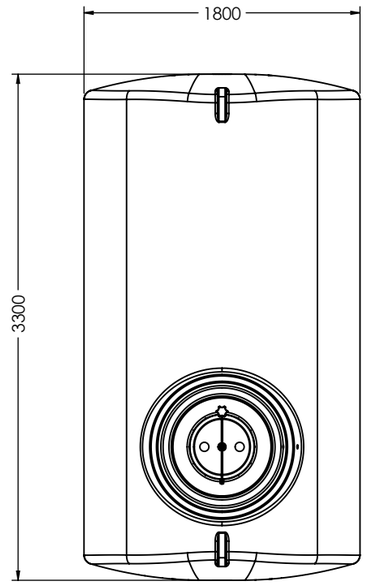

PLAN VIEW

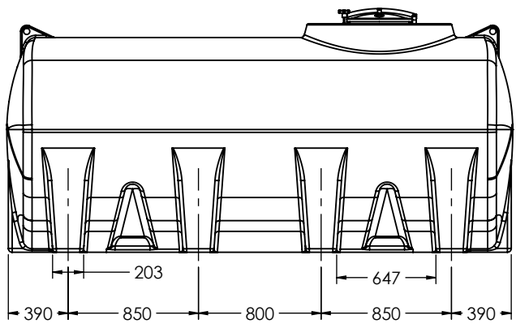

LEFT VIEW

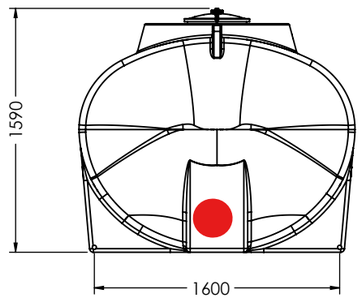

FRONT VIEW

DESIGN DATA

DESIGN PRESSURE: ATMOSPHERIC	MAXIMUM CAPACITY (LTRS):
DESIGN TEMPERATURE: 40°C	WORKING CAPACITY (LTRS):
WORKING PRESSURE: ATMOSPHERIC	APPROX. WEIGHT FULL (KGS):
WORKING TEMPERATURE: 40°C	APPROX. WEIGHT EMPTY (KGS):

MOULDED LIFTING LUGS: 4 - 0°, 90°, 180° & 270°

METHOD OF SUPPORT: FIRM, FLAT, FULLY SUPPORTING BASE OF CONCRETE OR OTHER SUITABLE MATEREAL

MATERIAL DATA

MATERIALS OF CONSTRUCTION:

MATRIX REVOLVE N-307. REVOLVE IS A HIGH DENSITY (0.939 g/cm3), LOW MELT (3.5 g/ 10 min) HEXENE POLYETHYLENE GRADE FOR ROTOMOULDING. THE GRADE IS FULLY PROTECTED AGAINST THERMAL AND LIGHT DEGRADATION: N-307 IS UV10 STABILISED.

INSPECTION AND TESTING

WORKS TEST: ALL TANKS ARE THICKNESS TESTED BY ULTRASOUND AFTER DEMOULD IN ADDITION AIR SUPPORTED LEAK TEST ARE CARRIED OUT ON FLANGE LINES.

NOTE SECTION

	NAME	SIGNATURE	DATE
DRAWN	LC	L.Crane	02/05/2024
CHECKED			

UNLESS OTHERWISE SPECIFIED:
DIMENSIONS ARE IN MILLIMETERS
SURFACE FINISH: MDPE
TOLERANCES: ±3%

3RD ANGLE PROJECTION

DO NOT SCALE DRAWING

REVISION: -

ENDURAMAXX®
FLUID MANAGEMENT INNOVATION

DWG TITLE:

6000L HORIZONTAL TRANSPORT TANK

DWG NO: 171040-6000L-TRANSPORT

A3

SCALE:1:40

SHEET 1 OF 1