ITEM NO.	PART NUMBER	DESCRIPTION	QTY.
1	175220045	200L 60DEG CONE TANK & FRAME	1
2	135322	Ø255 SCREW LID & RIM	1

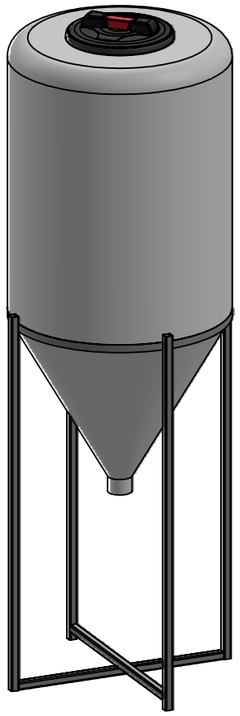

LEFT DIMETRIC VIEW

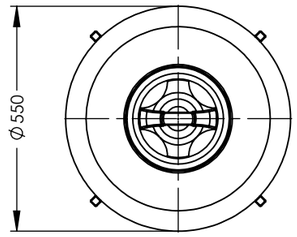

PLAN VIEW

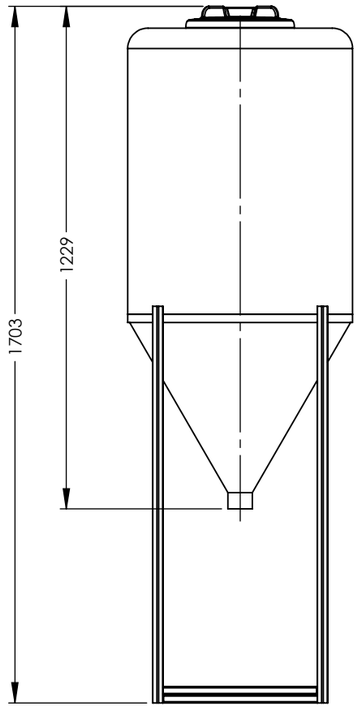

FRONT VIEW

DESIGN DATA

DESIGN PRESSURE: ATMOSPHERIC	MAXIMUM CAPACITY (LTRS):
DESIGN TEMPERATURE: 40°C	WORKING CAPACITY (LTRS):
WORKING PRESSURE: ATMOSPHERIC	APPROX. WEIGHT FULL (KGS):
WORKING TEMPERATURE: 40°C	APPROX. WEIGHT EMPTY (KGS):

MOULDED LIFTING LUGS: 4 - 0°, 90°, 180° & 270°

METHOD OF SUPPORT: FIRM, FLAT, FULLY SUPPORTING BASE OF CONCRETE OR OTHER SUITABLE MATEREAL

MATERIAL DATA

MATERIALS OF CONSTRUCTION:

MATRIX REVOLVE N-307. REVOLVE IS A HIGH DENSITY (0.939 g/cm3), LOW MELT (3.5 g/ 10 min) HEXENE POLYETHYLENE GRADE FOR ROTOMOULDING. THE GRADE IS FULLY PROTECTED AGAINST THERMAL AND LIGHT DEGRADATION: N-307 IS UV10 STABILISED.

INSPECTION AND TESTING

WORKS TEST: ALL TANKS ARE THICKNESS TESTED BY ULTRASOUND AFTER DEMOULD IN ADDITION AIR SUPPORTED LEAK TEST ARE CARRIED OUT ON FLANGE LINES.

NOTE SECTION

	NAME	SIGNATURE	DATE
DRAWN	LC	L.Crane	18/03/2022
CHECKED			

UNLESS OTHERWISE SPECIFIED:
DIMENSIONS ARE IN MILLIMETERS
SURFACE FINISH: MDPE
TOLERANCES: ±3%

3RD ANGLE PROJECTION

DO NOT SCALE DRAWING

REVISION: -

ENDURAMAXX®
FLUID MANAGEMENT INNOVATION

DWG TITLE:

200L 60DEG CONE TANK

DWG NO: 175220045-200L-60CONE

A3

SCALE:1:15

SHEET 1 OF 1