| ITEM NO. | PART NUMBER | DESCRIPTION | QTY. |
|---|---|---|---|
| 1 | 171705 | 500L FLAT BAFFLED SLIMLINE TANK | 1 |
| 2 | 135322 | ∅255 SCREW LID & RIM | 1 |
| 3 | 177915 | 1 1/2" HANSEN BSP (m) ADAPTOR | 1 |

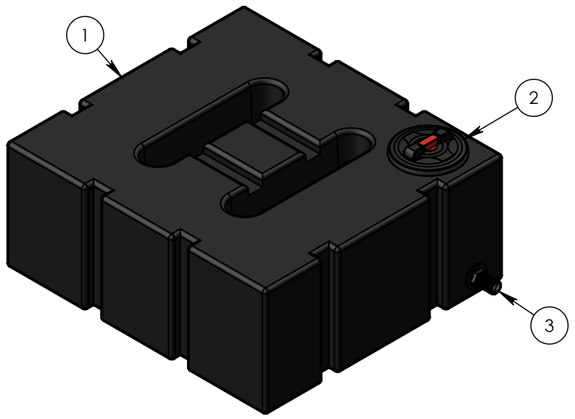


LEFT ISO VIEW
SCALE 1 : 20

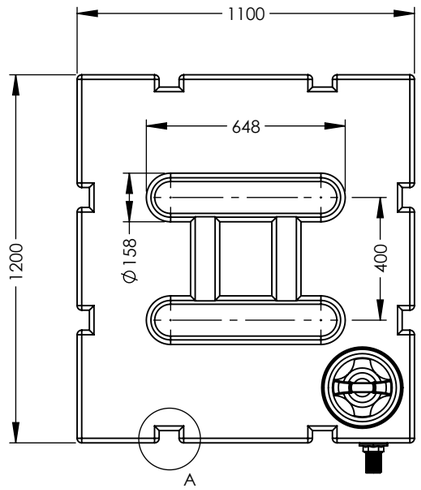


PLAN VIEW

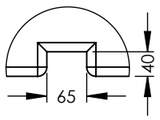


DETAIL A
SCALE 1 : 10

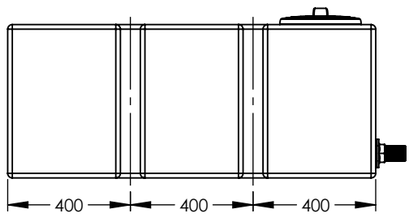


LEFT VIEW

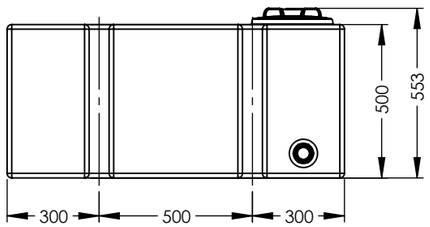


FRONT VIEW

## DESIGN DATA

| | |
|---|---|
| DESIGN PRESSURE: ATMOSPHERIC | MAXIMUM CAPACITY (LTRS): |
| DESIGN TEMPERATURE: 40°C | WORKING CAPACITY (LTRS): |
| WORKING PRESSURE: ATMOSPHERIC | APPROX. WEIGHT FULL (KGS): |
| WORKING TEMPERATURE: 40°C | APPROX. WEIGHT EMPTY (KGS): |

MOULDED LIFTING LUGS: 4 - 0°, 90°, 180° & 270°

METHOD OF SUPPORT: FIRM, FLAT, FULLY SUPPORTING BASE OF CONCRETE OR OTHER SUITABLE MATERIAL

## MATERIAL DATA

MATERIALS OF CONSTRUCTION:

MATRIX REVOLVE N-307. REVOLVE IS A HIGH DENSITY (0.939 g/cm3), LOW MELT (3.5 g/ 10 min) HEXENE POLYETHYLENE GRADE FOR ROTOMOULDING. THE GRADE IS FULLY PROTECTED AGAINST THERMAL AND LIGHT DEGRADATION: N-307 IS UV10 STABILISED.

## INSPECTION AND TESTING

WORKS TEST: ALL TANKS ARE THICKNESS TESTED BY ULTRASOUND AFTER DEMOULD. IN ADDITION, AIR SUPPORTED LEAK TEST ARE CARRIED OUT ON FLANGE LINES.

## NOTE SECTION

| | NAME | SIGNATURE | DATE |
|---|---|---|---|
| DRAWN | LC | L.Crane | 03/07/2023 |
| CHECKED | | | |

UNLESS OTHERWISE SPECIFIED:
DIMENSIONS ARE IN MILLIMETERS
SURFACE FINISH: MDPE
TOLERANCES: ±3%

3RD ANGLE PROJECTION

DO NOT SCALE DRAWING

REVISION: -

ENDURAMAXX®
FLUID MANAGEMENT INNOVATION

DWG TITLE:

500L FLAT BAFFLED SLIMLINE TANK

DWG NO: 171705-B-500-BAFFLED-F

A3

SCALE:1:20

SHEET 2 OF 2